Short Communication

THE STUDY OF NUTRIENT BALANCE IN SEQUENCING BATCH REACTOR WASTEWATER TREATMENT

Milenko Roš* and Janez Vrtovšek

National Institute of Chemistry, PO BOX 660, Hajdrihova 19, SI-1001 Ljubljana, Slovenia

Received 28-07-2004

Abstract

The Sequencing Batch Reactor (SBR) is very suitable system for combined wastewater treatment of organic compounds and nutrient removal. Reactor can work at different conditions such as anaerobic, anoxic or aerobic. The objective of our research work was to study the influence of phosphorus concentration on N removal in a SBR wastewater treatment at various COD:N:P ratios. The results showed that the removal of N was not dependent on initial P concentration, but P removal was related to P concentration in the original wastewater. All experiments were carried out with synthetic wastewater to which different amounts of P were added. The optimal COD:N:P ratio was 100:11:2 and the BOD5:N:P ratio was 100:15:2.6.

Key words: biological wastewater treatment, nutrient removal, SBR, C:N:P ratio

Introduction

The Sequencing Batch Reactor (SBR) is designed to operate an activated sludge process under non-steady state conditions. An SBR operates in a true batch mode with aeration and sludge settlement both occurring in the same tank. The major difference between SBR and a conventional continuous-flow activated sludge system is that the SBR tank carries out the functions of equalization, aeration and sedimentation in a time sequence rather than in the conventional space sequence of continuous-flow systems. In addition, the SBR system can be designed with the ability to treat a wide range of influent volumes whereas the continuous system is based upon a fixed influent flow rate. Thus, there is a degree of flexibility associated with working in a time rather than in a space sequence.[1] SBRs produce sludges with good settling properties, provided the influent wastewater is admitted into the aeration stage in a controlled manner. Controls range from a simplified float and timer based system with a PLC to a PC based SCADA system with color graphics using either flow proportional aeration or dissolved oxygen controlled aeration to reduce aeration time and energy consumption, enhance the

selective pressures for BOD, nutrient removal, and control of filaments.[1] An appropriately designed SBR process is a unique combination of equipment and software. Working with automated control reduces the degree of operator skill and attention requirements.

Sequencing Batch Reactor Process Cycles

The operating principles of a batch activated sludge process, or SBR, are characterized by five discrete periods: 1. Fill, 2. React, 3. Settle, 4. Decant and 5. Idle.

Fill

The influent wastewater is distributed throughout the settled sludge through the influent distribution manifold to provide good contact between the microorganisms and the substrate (wastewater). Most of this period occurs without aeration to create an environment that favours the procreation of microorganisms with good settling characteristics.

React

During this period aeration continues until complete biodegradation of BOD and nitrogen compounds is achieved. After the substrate is consumed the famine stage starts. During this stage some microorganisms will die because of the lack of food and will help reduce the volume of the settling sludge. The length of the aeration period determines the degree of BOD consumption.[2]

Settle

Aeration is discontinued at this stage and solids separation takes place leaving clear, treated effluent above the sludge blanket. During this clarifying period no liquids should enter or leave the tank to avoid turbulence in the supernatant.

Decant

This period is characterized by the withdrawal of treated effluent[1]. This removal must be done without disturbing the settled sludge.

Idle

In this stage the waste sludge is pumped to an anaerobic digester to reduce the volume of the sludge to be discarded. The frequency of sludge removal ranges between once each cycle to once every two to three months, depending upon system design.

The SBR has demonstrated good potential in biological nutrient removal processes. SBR systems offer high nutrient removal efficiency with low cost; this could be achieved by optimization of the treatment strategies with computer simulation.[3-8]

The conventional anaerobic-aerobic processes incorporating an anoxic zone for denitrifying[9] phosphorus have been already applied for nitrogen and phosphorus removal in full-scale wastewater treatment plants. The optimum N:P ratio for appropriate N removal is not well known.

In conventional municipal wastewater treatment the BOD_5:N:P ratio is 100:5:1.[10] The BOD_5:N:P ratio in industrial wastewater treatment is dependent on the wastewater composition. The aim of our research was to determine the BOD_5:N:P ratio for different concentrations of P compounds in the wastewater where high concentration of N compounds is present.

Materials and Methods

Laboratory Pilot Plant

The SBR laboratory pilot plant used in the study consisted of a 70 L rectangular reactor. Pneumatic valves were used for discharging treated wastewater and blowing air into the reactor. The operation of the pilot plant is monitored by five on-line measurements, i.e. pH, Redox potential (ORP), dissolved oxygen (DO) concentration, temperature (T) and water level. Operation was controlled by a PLC connected to a supervisory system based on a Windows NT 3.51 workstation with Factory Link supervisory software. The scheme of the laboratory-scale SBR is shown in Figure 1.

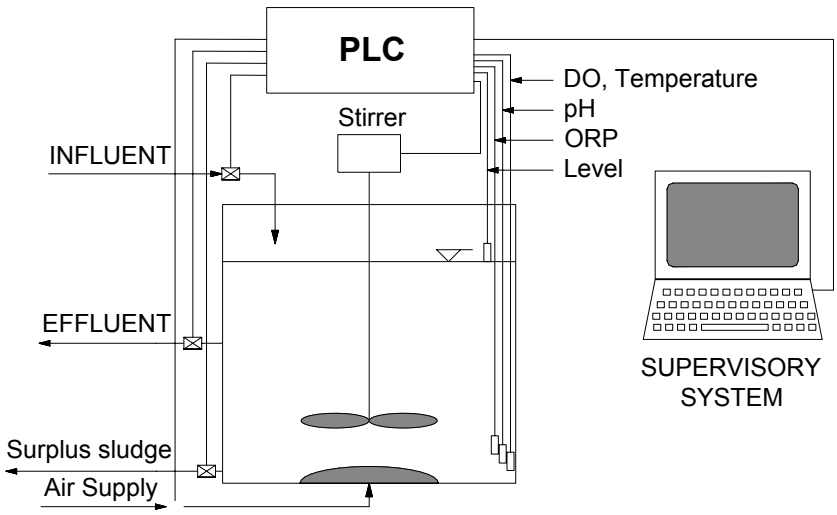

Figure 1. Scheme of automated sequencing batch reactor.

Wastewater composition

Synthetic wastewater was composed of 800 mg/L of meat peptone (Riedel-Dehaen AG D-30926, Seelze-Germany) dissolved in tap water. In a series of runs different amounts of phosphorus were added (from 0 to 15 mg/L of additional phosphorus).

The following ranges of individual parameters were measured: COD from 890 to 950 mg/L; BOD_5 from 570 to 620 mg/L; total nitrogen from 105 to 115 mg/L; total phosphorus from 8 to 30 mg/L (dependant on P addition).

All analyses were carried out according to Standard Methods.[11]

Results and discussion

Four series of experiments were carried out. Each series was of similar wastewater composition except for the P concentration. In Series 1 no P was added, in Series 2, 3 and 4 increasing amounts of P were added. Sequencing batch reactor (SBR) was operated in the following phases: Anoxic (Filling about 10 minutes) - 45 min, Aerobic - 215 min, Anoxic - 160 min, Additional aeration - 15 min, Settling - 15 min, Withdrawing - 10 min, Idling - 20 min.

The active volume of the SBR reactor was 49.8 L and the volume of wastewater added was 9.9 L (about 20%).

The main operating parameters of SBR are shown in Table 1.

When the COD:N:P ratio in wastewater was different from 100:10:2, phosphorus remained in the effluent. Figure 2 shows the phosphorus concentration during different phases of individual experiments.

Table 1. Parameters of SBR influent and effluent for different series of experiments.

Parameter	Series 1	Series 2	Series 3	Series 4
$COD_{influent}$ [$mg.L^{-1}$]	942	923	896	882
$COD_{effluent}$ [$mg.L^{-1}$]	43	38	46	38
COD removal efficiency [%]	95.4	95.9	95.0	95.6
$BOD_{5,\ influent}$ [$mg.L^{-1}$]	597	577	614	614
$BOD_{5,\ effluent}$ [$mg.L^{-1}$]	2	2	4	5
BOD removal efficiency [%]	99.7	99.7	99.3	99.2
$N_{total,\ influent}$ [$mg.L^{-1}$]	112.8	111.3	108.0	111.2
$N_{total,\ effluent}$ [$mg.L^{-1}$]	22.4	19.8	18.5	17.3
$P_{total,\ influent}$ [$mg.L^{-1}$]	9.0	17.3	21.2	29.9
$P_{total,\ effluent}$ [$mg.L^{-1}$]	0.2	0.1	3.9	11.8

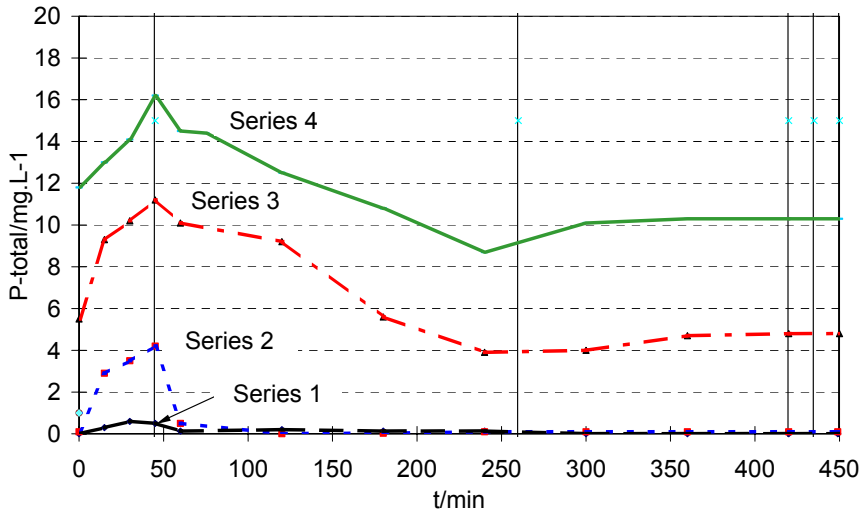

Figure 2. Phosphorus concentration in SBR during the different phases of individual experiments.

The technological parameters are shown in Table 2.

Table 2. Technological parameters in the SBR for different series of experiments.

Parameter	Series 1	Series 2	Series 3	Series 4
MLSS [$g.L^{-1}$]	3.47	3.54	3.51	3.47
MLVSS [$g.L^{-1}$]	2.97	3.05	2.82	2.70
Setleability [$mL{\cdot}L^{-1}$]	166	159	127	118
SVI [$mL.g^{-1}$]	48	45	36	34

The COD:N:P and BOD_5:N:P ratios are shown in Table 3.

Table 3. Ratios of COD:N:P and BOD5:N:P for different series of experiments.

Parameter	Series 1	Series 2	Series 3	Series 4
COD	100	100	100	100
N	10.1	10.3	10.5	11.1
P	1.0	1.9	2.0	2.2
BOD_5	100	100	100	100
N	15.2	15.9	14.7	15.4
P	1.5	3.0	2.8	3.0

Taking into account the results of nutrient (N and P compounds) removal (see Table 1), we conclude that the BOD_5:N:P ratio in the SBR is 10:15:3. This means that we can remove larger amounts of nitrogen compounds than in conventional activated

sludge systems where the BOD_5:N:P ratio is 100:5:1. In all cases the limiting factor is phosphorus.

Conclusions

Four different experiments in a sequencing batch reactor were carried out. Different COD:N:P ratios were studied. The optimal COD:N:P was 100:11:2 and BOD_5:N:P 100:15:3. In all series N removal was similar (from 80 to 84%) and COD removal was from 88 to 95%. P removal was dependent on the influent P concentration. When the COD:N:P ratio was different from 100:11:2, or the BOD_5:N:P ratio from 100:15:3, phosphorus remained in the effluent.

We can conclude that in the SBR higher amounts of N and P can be removed with respect to organic compounds (COD or BOD_5) than in conventional continuous activated sludge systems. The limiting element in the SBR system is P.

Acknowledgements

The Ministry of Education, Science, and Sport of the Republic of Slovenia supported this work. The authors would like to thank Dr. A. R. Byrne for constructive comments on the manuscript.

References

1. P. A. Wilderer, R. L. Irvine, M. C Goroncy In *Sequencing Batch Reactor Technology*, IWA Publishing, London, 2001.
2. B. Chambers, *Water Sci. Technol*. **1993**, *28*, 251–258.
3. E. Ayesa, G. Oyarbide, L. Larrea, J. L. Garcia-Heras, *Water Sci. Technol.* **1995**, *31*, 161–170.
4. T. G. Potter, B. Koopman, S. A. Svoronos, *Water Res*. **1996**, *30*, 142–152.
5. S. Isaac, *Water Sci. Technol.* **1997**, *35*, 225–232.
6. M. A. Z. Coelho, C. Russo, O. Q. F. Araujo, *Water Res*. **2000**, *34*, 2809–2817.
7. N. Hvala, M. Zec, M. Ros, S. Strmcnik, *Water Environ. Res.* **2001**, *73*, 146–153.
8. J. Miklos, E. Plaza, J. Kurbiel, *Water Sci. Technol*. **2001**, *43*, 61–68.
9. T. Kuba, van M. C. M. Loosdrecht, E. Murnleitner, J. J. Heijnen, *Water Res*. **1997**, *31*, 918–928.
10. V. Novotny, K. R. Imhoff, M. Olthof, P. A. Krenkel, In *Karl Imhoff's Handbook of Urban Drainage and Wastewater Disposal*, John Wiley & Sons, New York, 1989.
11. APHA, In *Standard Methods for the Examination of Water and Wastewater Analysis*, 20th Edition, American Public Health Association/American Water Works Association/Water Environment Federation, Washington D.C., 1998.

Povzetek

Šaržni biološki reaktor (SBR) je primeren za čiščenje komunalnih in industrijskih odpadnih vod. V avtomatiziranem laboratorijskem SBR smo študirali vpliv koncentracije fosforjevih spojin na odstranjevanje dušikovih spojin v SBR pri različnih razmerjih KPK:N:P. Izvedli smo 4 serije preskusov, kjer smo dodajali različne količine fosforjevih spojin, medtem ko je ostala koncentracija ogljikovih in dušikovih spojin praktično enaka. Rezultati raziskav so pokazali, da je čiščenje dušikovih spojin praktično enako, ne glede na koncentracijo fosforjevih spojin v odpadni vodi. Vse preskuse smo izvedli s sintetično odpadno vodo, v katero smo pri različnih serijah dodajali različne količine fosforjevih spojin. Optimalno razmerje KPK:N:P je bilo 100:11:2, BPK5:N:P pa 100:15:3.